switch modern

670 14th Street, Atlanta, GA 30318
www.switchmodern.com | info@switchmodern.com
404-605-0196

FontanaArte

CORRUBEDO

David Chipperfield, 2005

Corrubedo is a wall lamp with no-frills geometric lines that can be installed with the light source pointing either up or down, depending on where the beam of light is required. The front screen is available either in white or with mirror finish.

RELATED PRODUCTS

CORRUBEDO

Outdoor Lamp

switch modern

670 14th Street, Atlanta, GA 30318
www.switchmodern.com | info@switchmodern.com
404-605-0196

FontanaArte

TECHNICAL SHEET

Wall lamp. Polished white-painted metal (RAL 9003 gloss) or mirror-finish glass frame. Side diffusers in frosted glass.

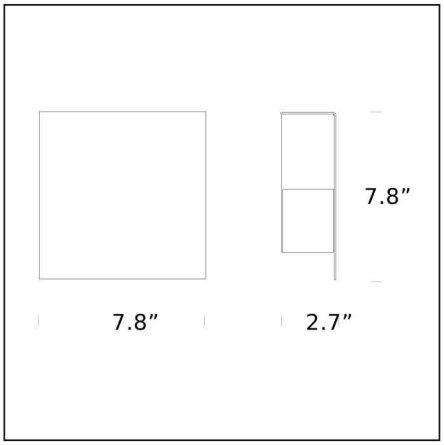

MODEL NAME: Corrubedo

CODE: UL5525..

DIMENSION: 7.8'' × 2.7'' × 7.8''

MATERIALS: Metal

COLORS

- Mirror-Finish
- White Gloss - RAL Code: RAL 9003 Gloss

LIGHTING SOURCE: 1×40W (HA) T4 G9

CERTIFICATIONS AND SYMBOLS:

ADA

670 14th Street, Atlanta, GA 30318
www.switchmodern.com | info@switchmodern.com
404-605-0196

FontanaArte

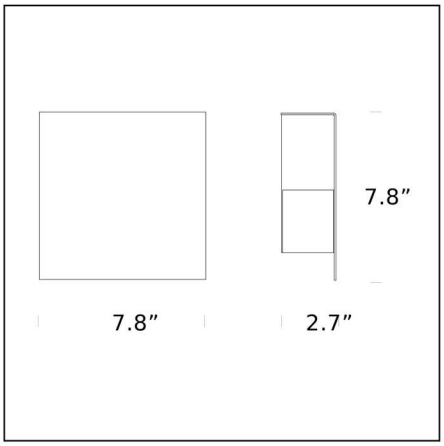

MODEL NAME: Corrubedo

CODE: UL5600..

DIMENSION: 7.8” × 2.7” × 7.8”

MATERIALS: Metal

COLORS

- Mirror-Finish
- White Gloss - RAL Code: RAL 9003 Gloss

LIGHTING SOURCE: 1×6W LED 700mA (3000 K, CRI 85, 600Lm)

CERTIFICATIONS AND SYMBOLS:

Subject to technical modifications and modifications to content