switch modern

670 14th Street, Atlanta, GA 30318
www.switchmodern.com | info@switchmodern.com
404-605-0196

DESIGN FEDERICO DELROSSO - 2017
FLOOR LAMP - METAL - METHACRYLATE

HASHI

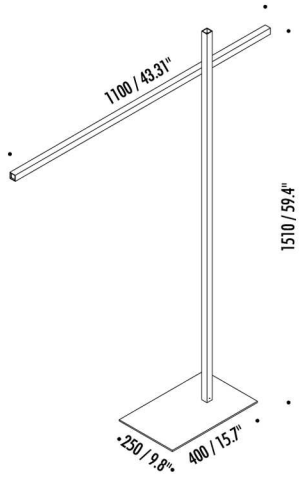

19030403	MATT BLACK	120 V - 60 Hz - 13 W LED - 3000K - 1000 lm BLACK CABLE - ADJUSTABLE - DIMMER